Asia-Pacific | Europe | North America

In-Province Refining:

Updated Economics of a Greenfield Oil Sands Refinery & Petrochemical Plant in Alberta

By: Salman Nissan and Ed Osterwald, CEG London

David Netzer, Houston

31 December 2015

Privileged and confidential

Table of contents

List of Figures

List of Tables

Definitions

$	Refers to US Dollars, unless otherwise stated
2006 Study	*"Alberta Bitumen Processing Integration Study"* by David Netzer, Consulting Chemical Engineer and Associates, March 2006
AFL	Alberta Federation of Labour
API / API°	API Gravity
bbl	Barrel
bpd	Barrels per day
bpsd	Barrels per service day
BTU	British Thermal Units
Dilbit	Diluted Bitumen (oil sands production mixed with condensate and / or naphtha)
c.	Circa
capex	Capital expenditure
C$	Canadian Dollars
CDU	Crude Distillation Unit
CEG	CEG Europe
CO_2	Carbon Dioxide
EBITDA	Earnings Before Interest, Taxation and Depreciation
EIA	US Energy Information Administration
EPC	Engineering, Procurement and Construction
EU	European Union
FCC	Fluidised Catalytic Cracker
FEED	Front End Engineering
GDP	Gross Domestic Product
GOA	Government of Alberta
HDPE	High Density Polyethylene
HH	Henry Hub
HHV	Higher Heat Value
HLS	Heavy Louisiana Sweet crude oil
HN	Heavy Naphtha
HUTF	Hydrocarbon Upgrading Task Force
IEA	International Energy Agency
IRR	Internal Rate of Return
ISBL	Inside Battery Limits
KBR	formerly Kellogg Brown & Root (part of Halliburton)
kW	Kilowatt-hour
LLS	Light Louisiana Sweet crude oil

LDPE	Low Density Polyethylene
Mmbd	Million barrels per day
Mmbtu	Million British Thermal Units
NPV	Net Present Value
NWU	North West Upgrading
OSBL	Outside Battery Limits
p.a.	Per annum
Project	David Netzer's proposed Alberta oil sands refining configuration
SMR	Steam Methane Reforming
TAN	Total Acid Number
tpd	Tons per day
UOP	Subsidiary of Honeywell, formerly "Universal Oil Products"
USGC	US Gulf Coast
WACC	Weighted Average Cost of Capital
WCS	Western Canada Select bitumen / diluent blend
WTI	West Texas Intermediate crude oil

DISCLAIMER

CEG Europe and its authors make no representation or warranty as to the accuracy or completeness of the material contained in this document and shall have, and accept, no liability for any statements, opinions, information or matters (expressed or implied) arising out of, contained in or derived from this document or any omissions from this document, or any other written or oral communication transmitted or made available to any other party in relation to the subject matter of this document.

1. EXECUTIVE SUMMARY

1.1. INTRODUCTION

The Government of Alberta has been examining potential routes to upgrading and / or refining bitumen for a number of years, with the goal of creating further value from the hydrocarbon resources prevalent in the Province. These studies have included the mandate of the *Hydrocarbon Upgrading Task Force* ("HUTF"), established in February 2004. More recently (2015), the new Provincial Government has been considering revisions to the bitumen royalty regime as a possible mechanism to create economic incentives for bitumen upgrading or processing.

This report was commissioned by the Alberta Federation of Labour in October 2015. CEG was asked to re-examine two issues:

- Analyse the impact of the recent decline in global oil prices on the economics of refining oil sands. To do so, we prepared an update of our 2014 report[1], which evaluated the likely financial performance of an scheme developed by David Netzer in 2006[2] at the request of the HUTF to process oil sands into fuels and petrochemicals; and
- Carry out a high level comparison of the Netzer upgrading scheme with the North West Upgrading's (NWU) Sturgeon Refinery, presently under construction in Redwater, Alberta.

1.2. COMPARISON OF NORTH WEST UPGRADING WITH THE NETZER APPROACH

Using publicly available information, we examined the process scheme utilised by NWU and compared it to the Netzer approach. It is clear that the two concepts are fundamentally different. In turn, their respective economic performance will differ as well.

Upgrading is not full scale crude oil refining

It is important for readers to understand that "upgrading" usually refers to converting bitumen to a synthetic crude oil, which then requires subsequent processing elsewhere in suitably configured refineries to generate finished products. In contrast, the Netzer refining approach would produce finished fuels and petrochemical at one site in Edmonton.

Prominent among our conclusions is that the configuration of North West Upgrading is an inappropriate approach to bitumen refining and the project itself has been poorly executed. These factors have combined to cause very significant escalation of capital costs.

---

[1] "*In-Province Upgrading: Economics of a Greenfield Oil Sands Refinery*" CEG Europe, (2014)

[2] http://www.energy.alberta.ca/EnergyProcessing/pdfs/albertaintegrationreport.pdf

Much of its output will be diluent, plus low value unfinished product that will be sold to local refiners. Therefore, little added value will be captured by North West Upgrading.

The Netzer design philosophy was fundamentally different. Mr. Netzer proposed a mixture of cracking, delayed coking and gasification to produce a wide and variable suite of fuel and chemical products. Output could be exported worldwide to those markets which offer the highest netbacks and margins. This structure has been successfully deployed by other hydrocarbon exporting countries elsewhere in the world.

Our main conclusions are summarised below:

- **Scale (i.e. throughput capacity)** – NWU's distillation capacity of 50,000 bpd (bitumen) is small and its size was mandated by the Government of Alberta. It will lack economies of scale and therefore have much higher unit operating costs. New refineries in recent years have typically been at least 300,000 bpd, which corresponds to the capacity in the Netzer approach.
- **Configuration** – A key element of the design of NWU is hydrocracking of vacuum residue, followed by gasification of the resultant pitch. NWU will also not utilise delayed coking.
- In contrast, the Netzer configuration includes a delayed coker, thereby providing a more efficient, flexible and cheaper solution to bitumen processing.
- **Product output** – The focus of NWU is on providing intermediate feedstocks to nearby customers, thus it will not extract the maximum potential value added. NWU's only finished fuel will be low sulphur diesel.
- **Project execution** – NWU employed multiple contractors and licensors during construction. This is inefficient and leads to escalation of costs. The Netzer configuration would use a single EPC contractor to oversee design and construction.
- **Power generation** – NWU's design is based on purchasing power from the local grid at market price. This is a more expensive option than the self-generated power design included in the Netzer configuration. Consequently, NWU will have higher operating costs.
- **Product marketing** – NWU is proposing to sell naphtha / diluent, plus low value unfinished product to local refiners. It is therefore our view that little added value will be captured by NWU. Most of the margin will be left for its customers, who are likely to take most of the available refining profits.
- The Netzer configuration will sell a variable slate of fuels and chemicals to those markets worldwide which offer the highest netbacks and margins.
- **Carbon capture** – NWU's goal of 90% "carbon capture" appears to be an environmentally-driven objective, but is not the most effective processing scheme. By precluding delayed coking due to the carbon capture requirement, residue hydrocracking became the other upgrading alternative. In so doing, the size of the plant was constrained.

By using delayed coking the Netzer configuration would still achieve 60% carbon capture and thus be more cost effective. Seeking 90% may have caused a 40% increase in capital cost at NWU.

It is our view that the economic returns from NWU will, at best, be quite low. Its design employs a blend of highly sophisticated process technology to merely convert bitumen into various feedstocks and CO_2 for sale to third parties, except for a stream of low sulphur diesel. It is unclear why the capability to convert naphtha into gasoline was not included in the design.

1.3. UPDATED GLOBAL TRENDS IN REFINING

The profitability of oil refining in all major markets around the world has improved dramatically in recent years. This occurred due to confluence of factors, which when taken together have triggered both higher utilisation and margins.

The continued ban on crude oil exports from the US rendered shale oil a "distressed feedstock" as US crude oil markets became separated from the rest of the world. From 2011 West Texas Intermediate (WTI) prices have been discounted to Dated Brent, leading in turn to some of the highest US refining margins in recent memory.

US shale oil demonstrated the dramatic impact having a distressed feedstock can have on profitability. Shell claimed that insufficient pipeline export capacity was one of the reasons for cancelling its Carmon Creek oil sands development. Given that the US Government rejected TransCanada's application to build the Keystone XL pipeline on 6 November 2015, the prospect of Canadian oil sands becoming stranded looks more likely.

Global refinery capacity trends are quite similar to those presented in our 2014 report. The most notable shift is about 2 million barrels of additional coking capacity in North America (2013 vis-a-vis 2015). Coking is the preferred upgrading process in the US and supports our view that the Netzer configuration is the preferred option (when compared to NWU).

1.4. UPDATED ECONOMICS OF IN-PROVINCE REFINING OF OIL SANDS

We have updated our 2014 economic assessment of the Netzer approach (the "Project") using the same methodology as in our 2014 report. Our update focuses on a lower oil price environment, as well as the associated refining margins that may be achievable for such a complex in Alberta. We have made updates to some of our key assumption to reflect the current hydrocarbon environment and cover the flowing areas:

- **Crude oil** – the results are now presented under three lower crude oil price cases, these being WTI at $40/bbl, at $50/bbl and at $60/bbl.
- **Natural gas** – a lower Henry Hub ("HH") natural gas price reflecting recent forward curves (as of 3 November 2015) with an average of $3.2/Mmbtu to 2025 and $4/Mmbtu thereafter.

- **Pricing methodology** – reflecting changing correlations and relationships to marker feeds since our 2014 report.
- **Refining margins** – using the same bases and correlations as our 2014 updated and reflecting the lower crude oil price cases.
- **Capital costs** – we have collaborated with Mr. Netzer and examined the capital cost projection in considerably more detail. Our latest assessment reflect more realistic contingencies and net escalation factors to take account of the current state of the industry. The result has been to decrease the capital cost estimate from $10.2 billion in our 2014 report to $9.6 billion.
- **WACC** – updated to reflect current long term bond rates, similar company betas and inflation. Our revised WACC calculation is marginally lower at 8.1%.

The results derived from our operating cash flow model of the proposed Project reflecting our revised assumptions under the Base Case are set out in Table 1 below.

Table 1: Indicative Base Case Results

WTI Price	NPV @ 8.1% real	IRR
$40	$3.9 billion	11.8%
$50	$8.1 billion	15.2%
$60	$12.3 billion	18.1%

Source: CEG analysis

Based on our latest capital cost estimates and arms-length purchase of feedstock at market prices, the Project appears to be reasonable, with NPV and IRR, showing acceptable returns under all three crude oil price cases.

We have also updated our alternative scenarios and certain sensitivities. The scenarios looked at the impact on the economics of supplying product into alternative markets, as follows:

- **Scenario 1:** fuel and petrochemicals products into Canada;
- **Scenario 2:** fuel products into the USA and petrochemicals in Alberta; and
- **Scenario 3:** fuel and petrochemicals products into Asia.

The results of these scenarios, set out in Table 2 below, show that although it is less profitable than the Base Case, Project economics remain reasonable.

Table 2: Economics of Sales to Alternative Destination Markets

Scenario	$40/bbl		$50/bbl		$60/bbl	
	NPV *($ billion)*	IRR	NPV *($ billion)*	IRR	NPV *($ billion)*	IRR
Base Case Local market	3.9	11.8%	8.1	15.2%	12.3	18.1%
Scenario 1 All to Canada	0.6	8.7%	4.5	12.3%	8.3	15.3%

Scenario 2 Fuel US / Petrochemicals Alberta	2.0	10.1%	5.6	13.2%	9.2	16.0%
Scenario 3 All to Asia	1.1	9.2%	4.8	12.6%	8.5	15.5%

Source: CEG analysis

There may be potential for the Project to receive a discounted price on the dilbit it purchases, if export routes for Canadian bitumen become further constrained. Table 3 below sets out the respective impacts of a 10% and 20% discount on the price of dilbit feedstock. Such discounts would have a significant effect on the Project and make it even more economically viable.

Table 3: Impact of Discounts on the Cost of Diluted Bitumen Feedstock

Scenario	$40/bbl		$50/bbl		$60/bbl	
	NPV ($ billion)	IRR	NPV ($ billion)	IRR	NPV ($ billion)	IRR
Base Case	3.9	11.8%	8.1	15.2%	12.3	18.1%
10% Discount	6.4	13.9%	11.4	17.5%	16.3	20.7%
20% Discount	9.0	15.9%	14.6	19.7%	20.2	23.1%

Source: CEG analysis

As we noted in our 2014 report, the Government of Alberta has the flexibility to adjust the cost of oil sands to users (through the Bitumen Royalty in Kind). Discounts on feedstock prices could be used, if necessary, to improve returns, should there be cost increases in other areas.

1.5. CONCLUSIONS

Based on our updated assessment the Project, as well as our review of NWU's configuration and some of the reasons for the difficulties it has encountered, we are still of the view that an in-Province bitumen refinery and petrochemical complex is likely to be attractive in more than just economic terms. So much so, in fact, that it would meet many of the criteria necessary to attract investment from the private sector.

In a low oil price environment, our analysis shows that the economics of the Project are likely to remain favourable, although lower than when oil prices were high. The Province has a number of options which could facilitate even higher returns, such as the bitumen royalty regime.

2. COMPARISON OF NORTH WEST UPGRADING WITH NETZER'S APPROACH

2.1. INTRODUCTION

At the request of the Alberta Federation of Labour in October 2015, CEG and David Netzer conducted a high level comparison of North West Upgrading's (NWU) Sturgeon Refinery with an oil sands refining configuration developed by Mr Netzer in 2006 for the Government of Alberta's "*Hydrocarbon Upgrading Task Force*." [3]

Using publicly available information we examined the process scheme utilised by NWU and compared it to the Netzer approach. It is clear that the two concepts are fundamentally different. In turn, their respective economic performance would differ as well.

Upgrading is not full scale crude oil refining

It is important for readers to understand that "upgrading" usually refers to converting bitumen to a synthetic crude oil, which then requires subsequent processing elsewhere in suitably configured refineries to generate finished products. In contrast, the Netzer refining approach would produce finished fuels and petrochemical at one site in Edmonton.

Prominent among our conclusions is that the configuration of NWU is an inappropriate approach to bitumen refining and the project itself has been poorly executed. These factors have combined to cause very significant escalation of capital costs.

Much of NWU's output will be diluent, plus low value unfinished product that will be sold to local refiners. It is therefore our view that little added value will be captured by NWU. Most of the margin will be left for its customers, who are likely to benefit from any upgrading profits arising from the project.

Thus economic returns from NWU will, at best, be quite low. Its design employs a blend of highly sophisticated process technology to merely convert bitumen into various feedstocks and CO_2 for sale to third parties, except a stream of low sulphur diesel. It is unclear why the capability to convert naphtha into gasoline was not included in the plant.

The Netzer design philosophy was fundamentally different. Mr. Netzer proposed a mixture of cracking, delayed coking and gasification to produce a wide and variable suite of fuel and chemical products. Output would be exported worldwide to those markets which offer the highest netbacks and margins. This structure has been successfully deployed by other hydrocarbon exporting countries elsewhere in the world.

[3] http://www.energy.alberta.ca/EnergyProcessing/pdfs/albertaintegrationreport.pdf

In addition, there are certain intermediate petrochemical streams in the Netzer configuration that could boost the potential value of the project even further (i.e. by using the output from steam cracking, the butadiene plant and steam generation, etc.). To do so would entail expansion of the plant's conversion / processing capabilities. An example would be the ethylene, which is currently assumed to be acquired and used locally in Alberta by a third party (presumably it would be purchased by a nearby chemical producer, at a discount, given the inherent difficulty in shipping ethylene long distances without a pipeline). If the capability to convert the ethylene into polymers such as HDPE or LDPE were included within the Project, then more value-added production will be within the complex itself.

2.2. PROCESS FLOW DIAGRAMS: NORTH WEST UPGRADING VERSUS NETZER

Process flow diagrams for North West Upgrading and the Netzer configuration are presented below in Figure 1 and Figure 2, respectively.

Figure 1: North West Upgrading, Sturgeon Refinery [4]

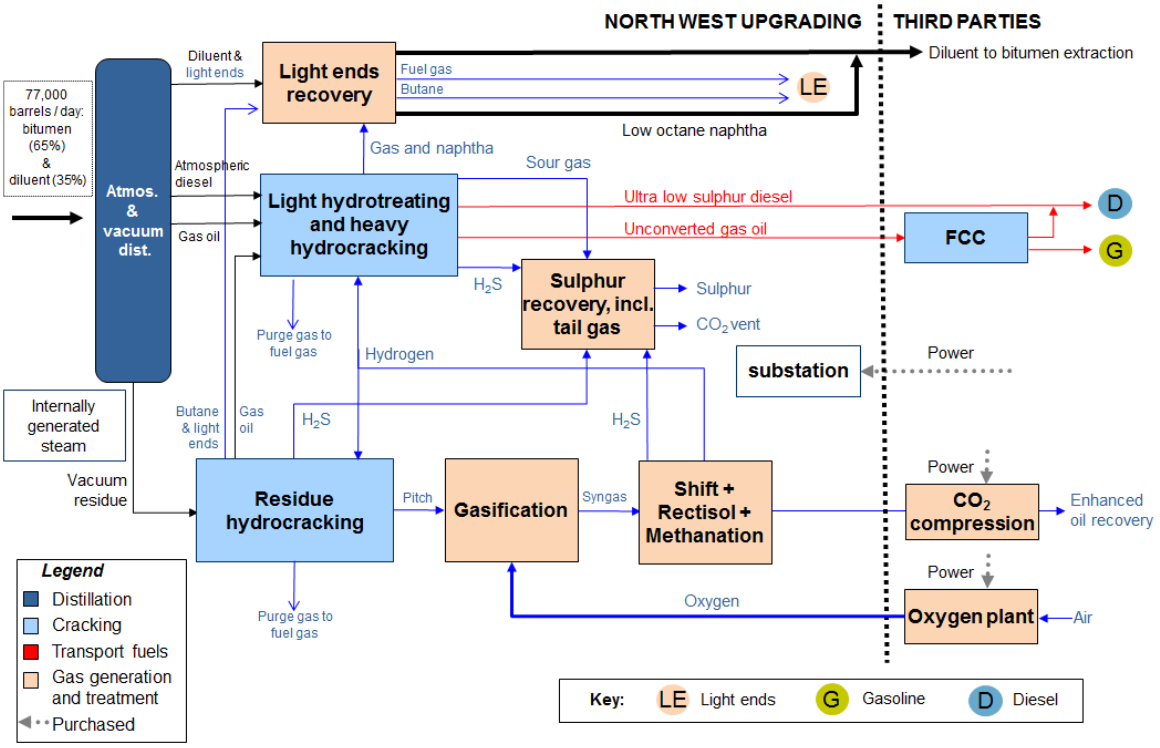

Source: CEG/Netzer analysis

Figure 2: Process flow diagram from Netzer's 2006 Study [5]

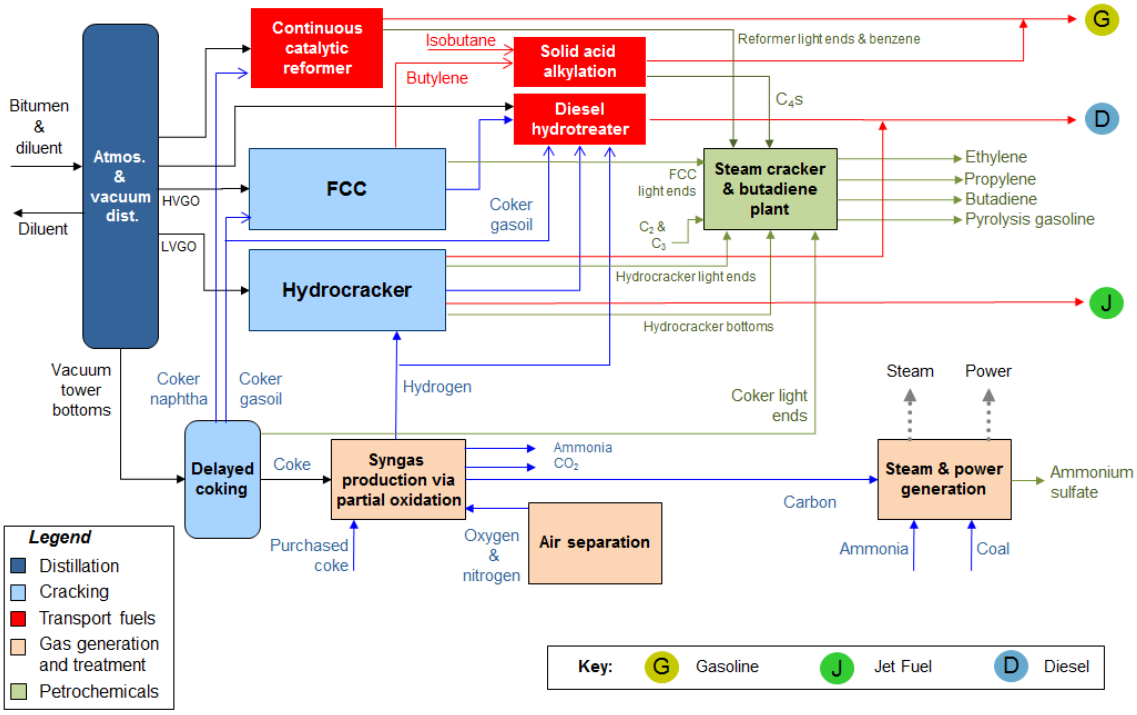

Source: CEG/Netzer analysis

[4] Adapted from "*Hydrocarbon Technology*" (2015), augmented with information from industry sources

[5] "*In-Province Upgrading: Economics of a Greenfield Oil Sands Refinery*" CEG Europe, (2014)

2.3. KEY DIFFERENCES

There are a number of key differences between NWU and the Netzer configuration. These are fundamental to explaining why the economic performance of the Netzer approach would be far superior to that of NWU.

NWU uses a complex combination of hydrocracking and gasification to generate a mixture of diluent for oil sands, together with diesel and naphtha. Due to the technology selected, however, atmospheric distillation is restricted to only 50,000 barrels / day of bitumen. NWU's small size prevents the plant from achieving valuable economies of scale. By comparison, most greenfield refineries built in recent years are at least 300,000 barrels / day.

The design of NWU is further compromised because it will not generate its own power but must rely on electricity purchased from the local grid at market prices. Complications and inefficiencies arise from other factors of its design, such as the need to purchase oxygen from a plant owned by third parties and use of air instead of water for cooling (water is usually more efficient and reduces capital cost compared to air). These and many other important differences are explained in detail in Appendix 1.[6]

In contrast to NWU, the Netzer configuration proposed a combination of delayed coking and steam cracking to dispose of most heavy residues. It would also produce valuable petrochemicals, while still capturing about 60% of CO_2 emissions. The design of NWU was driven in part by the desire to meet a target of >90% carbon capture. This triggered at least 40% increase in capital cost and also eliminated the possibility of producing many types of chemicals.

In processing a hydrocarbon such as bitumen (or other very heavy crude oils for that matter), there is always an issue of how to extract value out of the heavy residue that remains after the initial separation of the lighter components. The options normally considered are residue hydrocracking and delayed coking. It is our understanding, from discussions with refiners on the US Gulf Coast, that when coking is compared to residue hydrocracking for the processing of oil sands, delayed coking is almost always preferable, mainly due to lower capital cost. In addition, while there is a viable market for coke, it is difficult to dispose of pitch (a by-product of residue hydrocracking) because it has zero or negative value.

Table 4 below provides the key elements that resulted from our comparison and other important observations.

---

6 "*Conceptual Evaluation of the North West Upgrader (NWU) vs. the 2006 Alberta Bitumen Integration Study*" by David Netzer was prepared at the request of the Alberta Federation of Labour as part of this update.

Table 4: Comparison of NWU with Netzer Configuration

Key Factor	NWU	Netzer (2006)	Comments
Scale, i.e. throughput capacity (bpd bitumen)	50,000	300,000	New refineries in recent years are typically at least 300,000 bpd A new 50,000 bpd refinery would have much higher unit operating costs
Configuration	Hydrocracking of vacuum residue with gasification of resultant pitch, but without delayed coking	Catalytic cracking, delayed coking, partial oxidation and steam cracking	The design limit of vacuum residue hydrocracking (25-26,000 bpd) is governed by the 50,000 bpd bitumen feed
Product output	Mainly diesel, some gasoline and diluent for oil sands	Gasoline, jet, diesel & petrochemicals	The focus of NWU is on intermediate feedstocks for nearby customers The only finished fuel produced by NWU will be low sulphur diesel and perhaps a small amount of LPG
Project execution	Multiple contractors and licensors have been involved. This is inefficient and leads to escalation of costs	Would use a single EPC contractor to oversee design and construction	The execution model used by NWU could cause total capital investment to double
Power generation	Purchased from local grid at market price	Self-generated power	NWU will have higher operating costs than the Netzer configuration
Product marketing	Will sell diluent, plus low value unfinished product, to local refiners	Will sell a variable slate of fuels and chemicals to those markets worldwide which offer the highest netbacks and margins	NWU will not be able to optimise between destination markets and therefore will have much lower margins than the Netzer configuration
Carbon capture	Goal of 90% "carbon capture" precluded delayed coking	Would still achieve 60% carbon capture by using delayed coking	Seeking 90% carbon capture (versus 60% for Netzer) may have caused a 40% increase in capital cost at NWU

Source: CEG/Netzer analysis

Supporting analysis and further detail is provided in Appendix 1, which was prepared for this update by David Netzer.

3. UPDATED GLOBAL TRENDS IN REFINING

3.1. UTILISATION AND PROFITABILITY: REFINING

The profitability of oil refining in all major markets around the world has improved dramatically in recent years. This occurred due to confluence of factors, which when taken together have triggered both higher utilisation and margins.

In particular, the shift in profitability in the United States is nothing short of extraordinary. Only a few years ago, refineries were being closed or sold as quickly as possible. Some companies, Murphy Oil being a good example, decided in 2010 to exit the sector altogether. Similarly, ConocoPhillips spun-out its refining into a separate entity (called Phillips 66) in 2012. As explained below, these moves proved to be short sighted, due to the impact of the shale oil boom beginning in about 2011, which together with the ban on exports of crude oil from the US, created an ideal environment for domestic refiners.

Figure 3 below illustrates the movement in annual net refining margins and average refining capacity utilisation for various regions from 2000 to 2015 [7].

Figure 3: Regional Refining Net Margins & Average Utilisation (2000–2015[7])

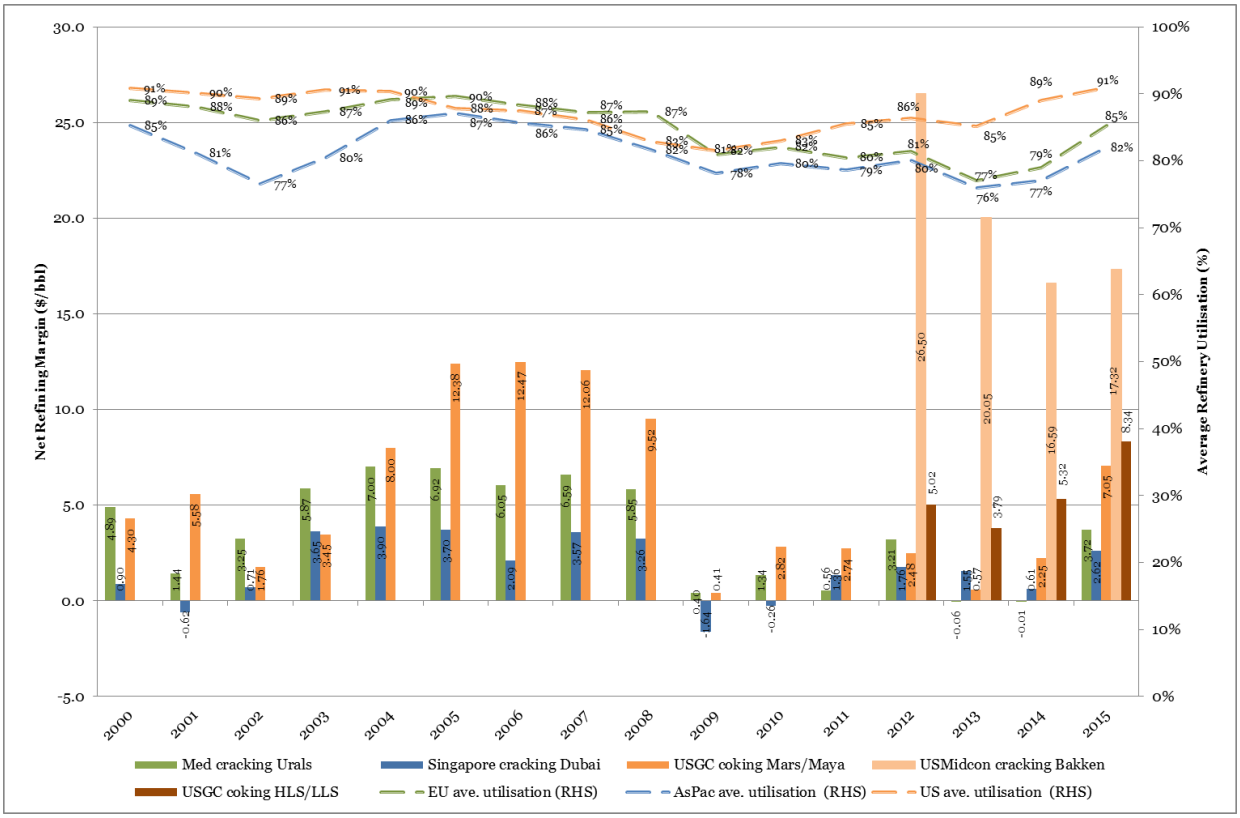

Source: EIA, IEA's *Oil Market Report (OMR), BP Statistical Review 2014,* CEG analysis[8]

[7] Figures for 2015 reflect the eight months to August 2015 for average utilisation and nine months to September 2015 for net refining margins.

The continuing ban on crude oil exports from the US has rendered shale oil a "stranded feedstock" since US crude oil markets have become separated from the rest of the world. From 2011 WTI prices have been discounted to Dated Brent, leading in turn to some of the highest US refining margins in recent memory (as illustrated in Figure 3 above).

3.2. THE GLOBAL REFINING INDUSTRY

Figure 4 below shows the capacity of different types of process units in each of the major regions of the world, as of 1 January 2015.

Figure 4: Global Refinery Capacity & Configuration as at 1 January 2015

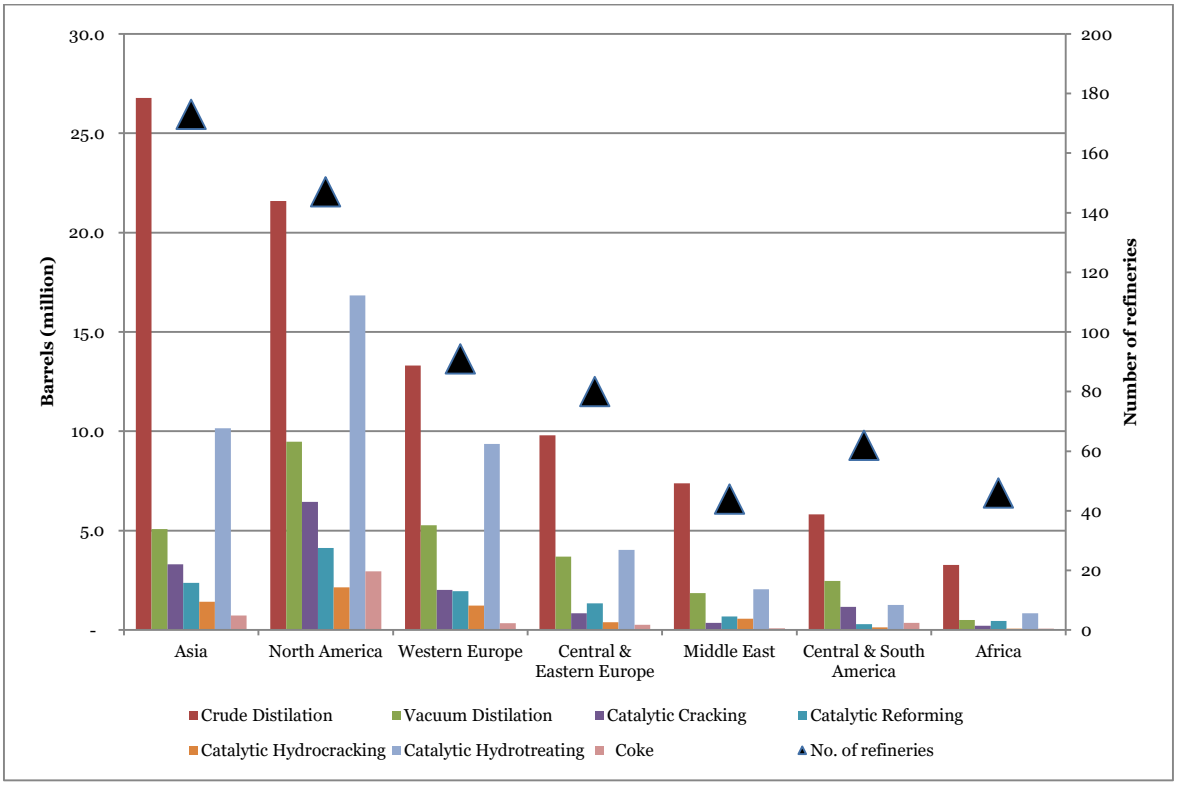

Source: *Oil & Gas Journal, 2015 Worldwide Refinery Survey*

The capacity patterns are quite similar to those presented in our 2014 report (basis 3 December 2012), with most categories being unchanged. Asia still has the largest refining sector, with increases in distillation capacity, but it lags North America in upgrading and complexity (i.e. vacuum distillation, catalytic / hydrocracking and coking).

The most notable shift, however, was about 2 million barrels of additional coking capacity in North America (2013 vis-a-vis 2015). Coking is the preferred upgrading process in the US and formed a key part of Netzer's configuration (see Figure 2 above). As an example, on 2 November 2015 Marathon Petroleum cancelled a $2.5 billion upgrade of its Garyville, Louisiana refinery that would have involved the addition of residue hydrocracking. Garyville already has a coking unit and it is understood that its owners came to the

8 Net refining margin data for US mid-continent ("USMidcon") cracking Bakken and "USGC coking HLS/LLS" are only available from May 2012, due to change the in refining margin calculation basis and methodology used in the IEA's OMR. Average refinery utilisation data for 2000 to 2012 from the *BP Statistical Review* and from IEA's *OMR* thereafter.

conclusion that residue hydrocracking was unlikely to generate sufficient returns based on its capital cost.

The effect of increasing complexity in the US is again quite apparent in Figure 3 above. Net margins at US coking refineries were consistently the highest in the world, until the emergence of shale oil (e.g. "USMidcon cracking Bakken").

US shale oil demonstrated the dramatic impact having a distressed feedstock can have on profitability. Shell claimed that insufficient pipeline export capacity was one of the reasons for cancelling its Carmon Creek oil sands development. Given that the US Government rejected TransCanada's application to build the Keystone XL pipeline on 6 November 2015, the prospect of Canadian oil sands becoming stranded looks more likely.

If this is the case, then the outlook for in-Province refining in Alberta would be further enhanced.

4. UPDATED ECONOMICS OF IN-PROVINCE REFINING OF OIL SANDS

4.1. INTRODUCTION

We have updated our economic assessment of the Project using the same methodology as in our 2014 report but in a lower oil price environment, where the margins that may be achievable for such a complex in Alberta have changed as well. Our assessment covers the 30 year period from 2016 to 2045. The key assumptions in our update are set out in the section below.

4.2. KEY UPDATE AREAS

4.2.1. Crude Oil

As before, we have assumed that the feedstock will be a blend of oil sands / bitumen and diluent (in a ratio of 3 to 1 as detailed in the mass balance in the 2006 study). The bitumen / diluent blend is comparable to Western Canada Select, a heavy crude oil with a density of 20.5° API.

Our results are now presented under three crude oil price cases, these being WTI at $40/bbl, at $50/bbl and at $60/bbl.

4.2.2. Natural Gas

Given the current situation and outlook for gas prices in North America we have revised our previous assumption of Henry Hub ("HH") natural gas being at a constant real price of $5/Mmbtu. Our current assessment has used the HH forward curve as at 3 November 2015 which covers the period 2016 to 2025. The average HH forward curve price for this period is $3.2/Mmbtu. Thereafter we have assumed a constant real price of $4/Mmbtu.

4.2.3. Pricing Methodology

Our outlook for future fuel and chemical prices was derived from historic correlations between crude oil prices and refining margins. The methodology we have used is the same as that in our 2014 report, however, for certain products, correlations and relationships to marker feeds have changed. An example of this is the historical relationship between ammonia and natural gas, where the ammonia price has now effectively decoupled from gas and has a much closer relationship with the crude oil price.

4.2.4. Refining Margins

We have used the same bases and correlations as presented in our previous report and applied this to the lower crude oil prices as set out in Table 5 below.

Table 5: Assumptions for developing refining margins

WTI *($/barrel)*	USGC Mars / Maya Coking Margin *($/barrel)* [9]
40	12.1
50	13.9
60	15.6

Source: CEG analysis

4.2.5. Capital Costs

We reassessed the Project's capital costs, given that there have been significant events in the oil and gas industry over the last 18 months. In our 2014 report we only undertook a high level review of Mr. Netzer's original estimate. It was escalated for the intervening time period (i.e. 2006 to 2013). For this update, however, we have collaborated with Mr. Netzer and have examined the capital cost projection in considerably more detail.

We therefore have taken the original 2006 estimate and made the following adjustments:

- **2006 Contingency** – In this update we reduced the contingency from 40% (i.e. the figure used in the 2006 study) to 25% on all ISBL and OSBL items. The rational was that the Netzer methodology, which was to base the capex estimate on real project costs, validated by experts and then adjusted for location and time, was an inherently conservative approach. A 40% contingency would only be appropriate where the process definition is very preliminary and there is a real possibility that significant blocks of costs having been omitted. In contrast, the Netzer methodology was relatively detailed in both scope and process unit definition, thus a contingency of 25% is more aligned with industry practice.
- **Cost inflation** - The amended Netzer cost-plus contingency (i.e. 25%) was then broken down into categories (equipment, labour, etc.) using published factors. The costs for these individual elements were then inflated using industry-based cost inflation indices for equipment, materials, etc., as appropriate.
- **Likely cost deflation** - The cost inflation described above converted Netzer's 2006 costs to either a late 2014 or mid-2015 basis, depending on the source. These do not, however, reflect the downturn in costs and prices which are now becoming apparent due to the decline in oil prices since late 2014.
  - We therefore examined the impact of lower oil prices on steel and other primary material costs in previous downturns, which suggest that they may drop as much as 50%. Labour costs tend to decline too.
  - Since industry cost indices tend to lag events, we have assumed that overall capex will decrease by 5% across the board from now until the date the EPC contract is place. It is our view that this 5% decrease is relatively conservative; some portions of industry suggest that decreases in excess of 10% are more likely.

[9] For an archetype USGC cracking / coking refinery processing a blend of Mars and Maya.

- **Location factor** - Lastly we applied a 12% uplift location factor for Alberta versus the USGC reference. This obviously varies with time depending on the degree of activity in Alberta. There will be some inherent uplift reflecting plant winterisation, lost construction days for bad winter weather (although this is small), etc. Given the decline in activity across the whole hydrocarbon sector in North America we believe that 12% is a reasonable value and certainly not the 30% claimed when the oil and associated construction industries operating a full capacity in 2013.

Table 6 below sets out our revised breakdown of the Project's capital costs.

Table 6: Breakdown of Construction Costs (US$ billion)

	Per 2006 Study						
Category	**Base Estimate Cost**	**Contingency at 40%**	**Total Cost**	**Impact of reduction in contingency to 25%**	**2007 to 2015 Net Escalation[10]**	**Total 2015 Cost**	***Notes***
ISBL	3.18	1.27	4.45	(0.48)	1.01	4.98	
OSBL	1.84	0.26	2.09	(0.28)	1.06	2.88	
Total Plant			***6.55***			***7.86***	
Edmonton Location Factor Uplift			0.79			0.99	*1*
Total Plant at Edmonton			***7.33***			***8.85***	
License Fees			0.1			0.13	*2*
Land Costs			0.01			0.01	
Owners Costs			0.2			0.55	*3*
Total Costs			***7.64***			***9.57***	
Escalation During Construction			1.46			n/a	*4*
Total Construction Costs (ex. Working Capital)			***9.10***			***9.57***	

Source: CEG analysis

Note 1: The 2006 Study assumed a location factor uplift of approximately 12%. Whilst this increased in the years up to 2013, the current decline in oil industry activity in Alberta implies that there is no justification to increase from the percentage assumed in 2013.

Note 2: The 2006 Study assumed licence fees of US$ 95 million. We have assumed instead that such fees would be 3% of ISBL & OSBL costs.

Note 3: The 2006 Study assumed Owners Costs of US$ 200 million (c.3% of ISBL & OSBL costs). Based on our experience of projects of a similar nature, Owners Costs are usually in the region of 7% to 14% of the ISBL & OSBL costs. For this project we have assumed Owners Costs of 8% of ISBL & OSBL.

Note 4: The 2006 Study applied a 5% compounded annual escalation for each year of project execution for capital costs not yet incurred. It is our view this is double counting to an extent, as project contingencies are already included. In addition, we believe that the owner would take the steps necessary to ensure that all contractors are tied in to an extent which would not allow for significant escalation during construction.

10 Average of 3% p.a. escalation before 5% cost deflation noted above. Therefore the implied overall / net escalation is in the region of 2.5%.

4.2.6. WACC

We have updated our WACC calculation to reflect current long term bond rates, similar company betas and inflation. Our revised WACC calculation is marginally lower at 8.1%.

4.3. BASE CASE RESULTS

The Base Case indicative value for the Project under the three crude oil price scenarios is set out in Table 7 below. The key assumptions for the Base Case are set out in Appendix 2.

Table 7: Indicative Base Case Results

WTI Price	NPV @ 8.1% real	IRR
$40	$3.9 billion	11.8%
$50	$8.1 billion	15.2%
$60	$12.3 billion	18.1%

Source: CEG

Based on our revised capital cost estimates and arms-length purchases of feedstock at market price, despite the low oil price environment, the Project is appears to generate acceptable returns (NPV and IRR).

It should be noted, however, that if export routes of Canadian bitumen become further constrained, prices will become more heavily discounted and the Project will accordingly generate higher returns. This is because any hydrocarbon is worth no more than its next best alternative. If for example there are limitations on oil sands pipeline export capacity, these constraints will increase the cost of delivering the material to other markets, since more expensive modes of transportation will be needed (e.g. by rail). In turn, this will result in oil sands having a lower "alternate value" in Alberta, given that higher transport costs will be incurred to deliver to distant markets.

4.4. SALES TO ALTERNATIVE MARKETS

As with our 2014 report, we have assessed the potential impact on the viability of the Project of exporting its production into three alternative markets, these being the USGC, Canada (as a whole) and Asia. Again we used the same methodology as in our 2014 report for estimating transportation costs of refined and petrochemical products from Alberta to these markets.

As a recap the scenarios are set out in Table 8 below.

Table 8: Scenarios for Destination Markets for Output from the Project

Scenario		Alberta	Canada	US	Asia
Base Case (Local market)	Fuel Products	✓			
	Petrochemicals	✓			
1. All to Canada	Fuel Products		✓		
	Petrochemicals		✓		
2. Fuel US / Petrochemicals Alberta	Fuel Products			✓	
	Petrochemicals	✓			
3. All to Asia	Fuel Products				✓
	Petrochemicals				✓

Source: AFL & CEG

The results of the Base Case and Scenarios 1 to 3, under our three crude oil price sets are set out in Table 9 below.

Table 9: Economics of Sales to Alternative Destination Markets

Scenario	$40/bbl		$50/bbl		$60/bbl	
	NPV ($ billion)	IRR	NPV ($ billion)	IRR	NPV ($ billion)	IRR
Base Case Local market	3.9	11.8%	8.1	15.2%	12.3	18.1%
Scenario 1 All to Canada	0.6	8.7%	4.5	12.3%	8.3	15.3%
Scenario 2 Fuel US / Petrochemicals Alberta	2.0	10.1%	5.6	13.2%	9.2	16.0%
Scenario 3 All to Asia	1.1	9.2%	4.8	12.6%	8.5	15.5%

Source: CEG analysis

As we noted in our 2014 report, given its inland location and the potential transportation costs required for alternative markets, it appears that the highest returns generated by the Project will accrue if its output is supplied to local markets (i.e. Western Canada). It is clear that at times such local demand will exist. IHS Global Canada recently reported[11] that gasoline and diesel demand in the Prairie Provinces has been rising in recent years and refinery utilisation is also high. IHS also pointed out "*if unplanned shutdowns occur at Prairies refineries, product shortages on the prairies may result.*" We therefore conclude that if constructed, the Project would make a useful contribution to improving fuel product supply balances in western Canada.

[11] *"Western Canada Products Markets & Refining Background"* (April 2014), by Steven J. Kelley, HIS Global Canada Limited

Please note that for this update, however, we have not re-examined our 2014 assessments of the supply / demand situation in Alberta or any other region. One would need to consider local and regional supply / demand balances to understand how the Project could best maximise its returns.

4.5. SENSITIVITY ANALYSIS

There may be potential for the Project to receive a discounted price on the dilbit it purchases, if export routes for Canadian bitumen become further constrained. As with any other project of this nature, small reductions in the main feedstock price will have a favourable impact on the economics of the Project.

Table 10 below sets out the respective impacts of a 10% and 20% discount on the price of dilbit feedstock. Such discounts would have a significant effect on the Project and make it even more economically viable.

Table 10: Impact of Discounts on the Cost of Diluted Bitumen Feedstock

Scenario	$40/bbl		$50/bbl		$60/bbl	
	NPV *($ billion)*	IRR	NPV *($ billion)*	IRR	NPV *($ billion)*	IRR
Base Case	3.9	11.8%	8.1	15.2%	12.3	18.1%
10% Discount	6.4	13.9%	11.4	17.5%	16.3	20.7%
20% Discount	9.0	15.9%	14.6	19.7%	20.2	23.1%

Source: CEG analysis

Table 10 above shows that a modest price discount of 10% increases NPV by between c.$2.5 billion to c.$4 billion, depending on the crude oil price scenario, with a corresponding uplift in IRR of between c.2% and c.3%.

As we noted in our 2014 report, the Government of Alberta has the flexibility to adjust the cost of oil sands to users (through the Bitumen Royalty in Kind). Discounts on feedstock prices could be used, if appropriate, to improve economic returns.

Appendix 1: Conceptual Evaluation of the North West Upgrader (NWU) vs. the 2006 'Alberta Bitumen Integration Study'
By David Netzer

The purpose of this study is to highlight conceptual differences in bitumen refining between the North West Upgrading project ("NWU", currently under construction) and the *"Alberta Bitumen Integration Study"* (prepared in 2006 for the Hydrocarbon Upgrading Task Force) by David Netzer, Consulting Chemical Engineer & Associates.

The differences shown are closely linked to likely variations in project economics between the two routes.

Introduction

The escalation of the capital cost of NWU from C$ 4.2 billion in 2007 to the current estimate of C$ 8.8 billion for a 50,000 barrel / service day (bpsd) bitumen refinery (77,000 bpsd as diluted) has caused great concern. This escalation is out of all proportion to the anticipated inflationary increase in costs; indeed the two most widely used indices suggest a range of C$4.6 to C$5.1 billion, not C$8.8 billion. The cost overrun could negatively impact future Government of Alberta (GOA) interest in supporting bitumen upgrading in the Province.

In 2014 CEG of London was retained by the Alberta Federation of Labour to evaluate the economics of the configuration proposed in the 2006 "Alberta Bitumen Integration Study." CEG found that under most scenarios the economic returns from Netzer's configuration for bitumen upgrading would be attractive. Nevertheless the evaluation by CEG was based on a paper concept without the advantage of an executed project as built.

Given the actual experience with NWU, where overruns in capital cost have taken place, there is understandable scepticism whether the cost estimate in the 2006 study (independently reviewed and updated by CEG in 2014) is reasonable. If the cost of all bitumen upgrading schemes are likely to have similar escalation as NWU, the attractive economic returns projected by CEG might not be achievable.

Therefore, the purpose of this report is to compare the two bitumen upgrading configurations on a consistent basis and determine the key reasons for the cost overrun at North West Upgrading.

Figure 5 below is a high level process flow diagram of NWU. It is based on information available in the public domain, reinforced by verbal discussions with industry sources.

Figure 5: North West Upgrading, Sturgeon Refinery [12]

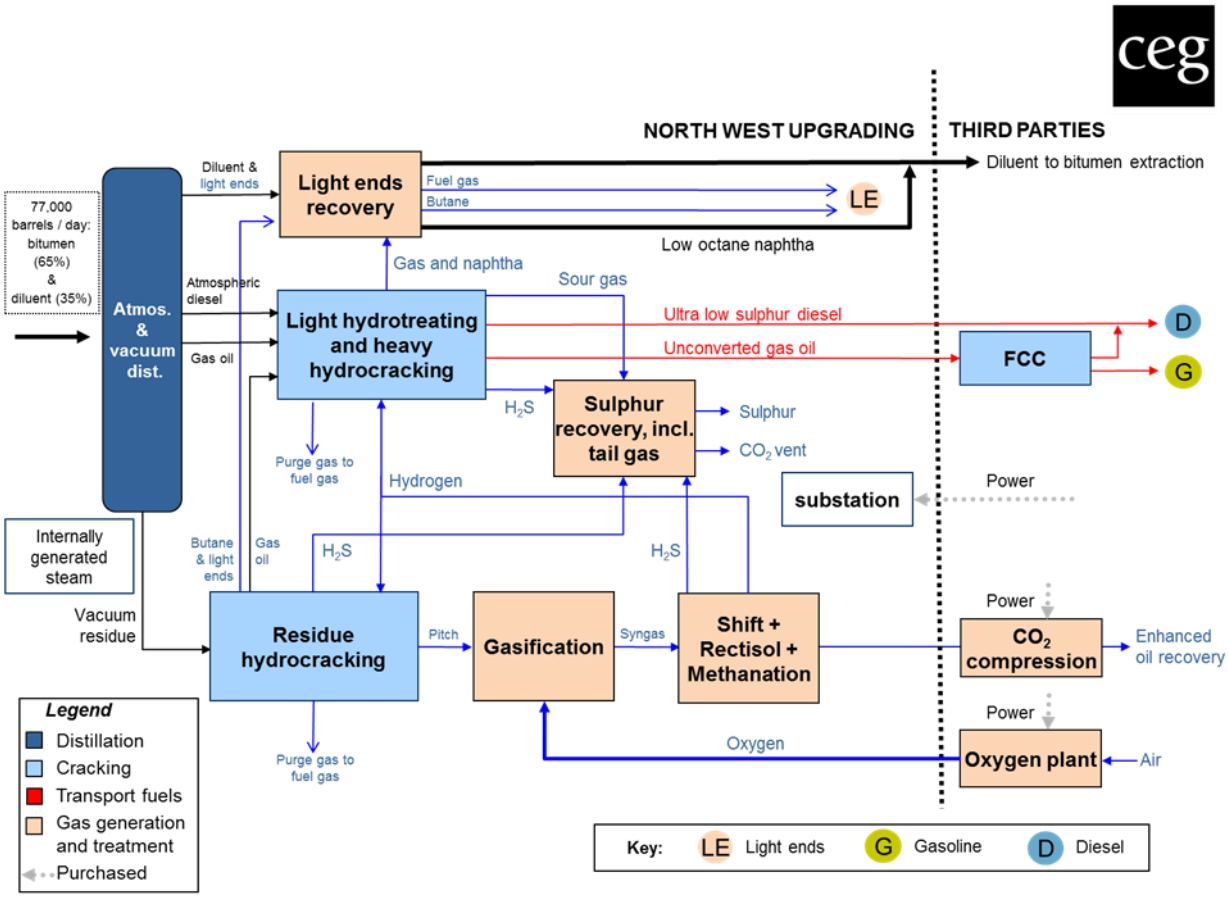

Similarly, Figure 6 presents the overall configuration from the "Alberta Bitumen Integration Study."

12 Adapted from "*Hydrocarbon Technology*" (2015), augmented with information from industry sources

Figure 6: Process flow diagram from the Netzer 2006 Study [13]

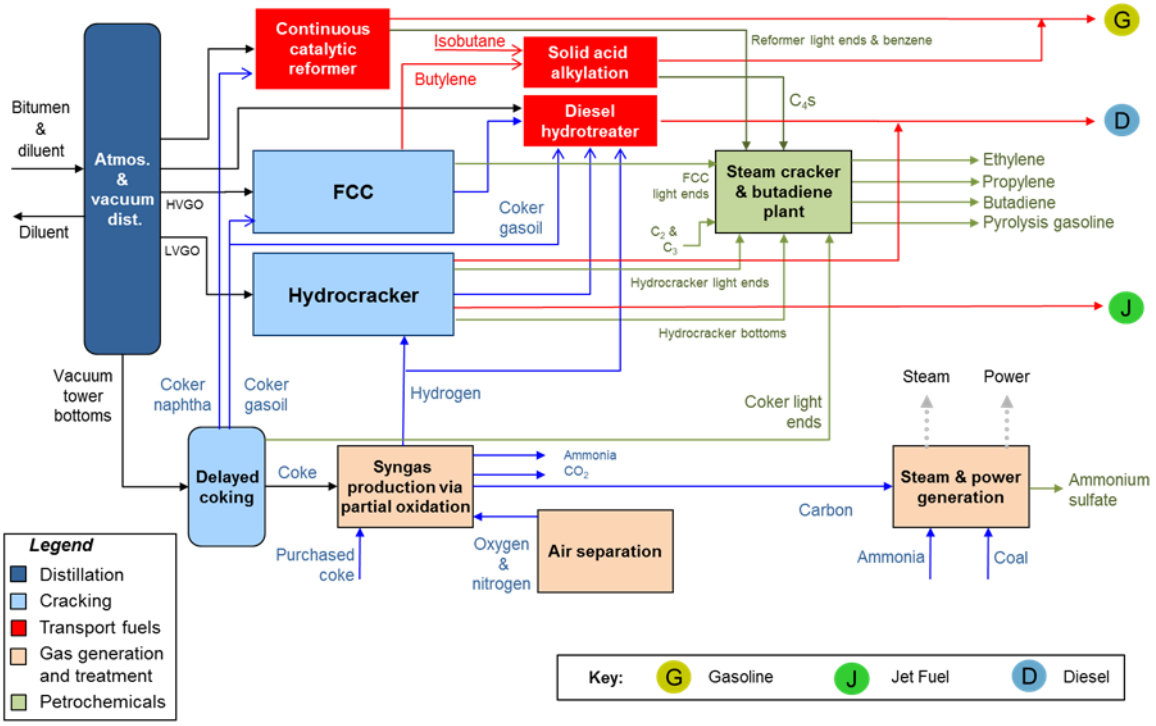

These two Figures are the basis of conceptual comparison that follows. **Premise of the 2006 bitumen study vs. NWU project:**

1. The nominal undiluted bitumen processing capacity is 50,000 bpsd for NWU vs. 300,000 bpsd for the 2006 bitumen study.
2. Output from the NWU project is limited to fuel products (mostly diesel), compared to fuel products (diesel, kerosene and gasoline) plus petrochemicals (mostly ethylene and ammonia synthesis gas) for the 2006 study.
3. Electric power is imported by NWU; it is self-generated in the 2006 proposal.
4. Oxygen (more likely 1,220 to 1,260 tons per day) is imported by NWU. The 2006 configuration would be self-sufficient in oxygen.
5. A minimum of 90% carbon capture was imposed on the design of NWU. No carbon capture is imposed or employed at the 2006 bitumen study although the proposed system is adoptable for 60% carbon capture by a 3rd party.
6. Sulfur recovery at NWU, probably 99.0-99.5%, employs conventional sulfur plants with a sub dew point tail gas recovery section that was not proposed in 2006. Residual sulfur removal is integrated with ammonium sulfate production in the 2006 plan.

[13] "*In-Province Upgrading: Economics of a Greenfield Oil Sands Refinery*" CEG Europe, (2014)

7. The NWU design avoided delayed coking for the bottom of the barrel, despite being commonly employed in Alberta (especially in the Fort McMurray area). It was also proposed in the 2006 configuration. The reasoning for excluding conventional coking is not well understood but may be related to environmental perceptions and assumed resistance by surrounding communities in the Edmonton area.
8. It is reasonable to assume that the ability to obtain environmental permits played a role in defining the configuration of NWU. The 2006 bitumen study addressed the permitting issue based on common practice in US Gulf Coast.

Items 1, 5 and 7 above are important differences between the design of NWU and what was suggested in 2006.

90% carbon capture and avoiding delayed coking (Items 5 and 7) were key factors that dictated the overall configuration of NWU. It uses hydrocracking of vacuum residue as licensed by Chevron Lummus as a core unit, which forced inclusion of the gasification of pitch as a second core unit.

Based on studies for other refineries, residue hydrocracking is more expensive than delayed coking, although hydrocracking offers somewhat higher conversion efficiency (i.e. perhaps 2.5-3.0% higher liquid product yield). Refining 8-9° API gravity bitumen results in >50% (by volume) vacuum residue (based on undiluted bitumen), compared to 15% vacuum residue for West Texas Intermediate (WTI) crude of 35-38° API. The latter is the common reference in comparative economic analysis in Alberta.

The capital cost of delayed coking is about 30% lower than resid hydrocracking, but produces about 17 weight % of the bitumen feed as coke (i.e. 1,350 tpd). Traditionally coke can be blended into coal and burned in power plants in Alberta, getting 75% of the caloric value of coal at burner tip. Thus if coal is priced US$ 1.5/Mmbtu HHV in Alberta, then coke (with 15,000 BTU/pound) could be worth US$ 37/metric ton.

Pitch from residue has zero to negative value and must be disposed on site.

Greater than 50% vacuum residue yield makes the economics of residue hydrocracking very unfavourable. Furthermore, the incentive arising from the higher conversion efficiency attributed to residue hydrocracking with WTI at US$ 45/barrel is only 42% of the conversion advantage at US$ 106/barrel WTI (as of June 2014).

Vacuum residue hydrocracking

As well as having very high hydrogen consumption, there are three other major side effects to hydrocracking vacuum residue:

1. The practical proven design limit of residue hydrocracking is under 50,000 bpsd, more likely about 40,000 bpsd. The design bitumen input capacity of 50,000 bpsd was dictated by the Government of Alberta, as opposed to the 300,000 bpsd (mostly in single train units) proposed in the 2006 bitumen study. The economies of scale issue will play a significant role in the relatively poor economics of the

NWU project once in operation, **regardless of the configuration downstream of the distillation units**.

2. One of the co-products resulting from vacuum residue hydrocracking (aside from diesel) is **heavy pitch**. About 28% of the yield from residue hydrocracking is pitch, which is both high sulfur and metals (about 2.5% and over 0.2% respectively by weight). It forms a solid below 120-150°C, thus making disposal quite difficult. Possibly 7,000-7,200 bpsd of pitch will have no market value and cannot be stored or disposed in an environmentally acceptable way. Pitch will probably be -5° to -3° API, equivalent to a specific gravity of about 1.1.

3. Given the above, the only practical way to dispose of the pitch is by gasification (partial oxidation) with pure oxygen, where the ultimate products are hydrogen and CO_2. As mentioned above, hydrocracking of vacuum residue will consume a significant amount of hydrogen. Production of hydrogen by conventional steam methane reforming (SMR) is commonly practiced in Alberta and requires far lower capital cost than gasification. The SMR option **could not** have been implemented at NWU, however, because the pitch from hydrocracking had to be disposed in an environmentally sensible way. Furthermore, the relative deficiency of partial oxidation is aggravated by the fact that the price of natural gas has declined from US$ 10 /Mmbtu when the NWU project was initiated to about US$ 3.0 /Mmbtu at the present time.

Conventional hydrocracking and diesel hydrotreating

As shown in Figure 5, vacuum gas oil (approximately 15,000 bpsd) from vacuum distillation and some 18,500 bpsd gas oil from the residue hydrocracker are sent to UOP's Unicracking unit. It produces diesel and lighter distillates, namely low octane naphtha, kerosene and C_3/C_4 light ends along with some C_1/C_2 fuel gas. When combined with hydrotreating of some 5,000-7,000 bpsd atmospheric diesel, the overall configuration is similar to the 2006 proposal.

Conventional hydrocracking, as well as residue hydrocracking, will produce a combined 7,500-8,500 bpsd of low sulfur unconverted gas oil and H_2S (contaminated with ammonia). Normally low sulfur heavy gas oil, having 12°-16° API gravity, could have been an excellent feed for a Fluidized Catalytic Cracker (FCC) or ethylene plant, as proposed in the 2006 study.

In the NWU, however, there is neither a FCC unit nor and an ethylene plant, thus finding a third party refinery with excess FCC capacity will become a part of the marketing challenge for the output from North West Upgrading.

Furthermore, the naphtha produced by hydrocracking (perhaps 5,000-6,000 bpsd) will be used as bitumen diluent. In future, it could proceed to octane elevation by a 3rd party, prior to blending into the gasoline pool. The added margin, however, will not be captured by NWU, where the alternate value will always be set as a bitumen diluent.

Some 500-1,000 bpsd LPG (i.e. C3 and C4) is produced along with C1/C2/H2 fuel gas. In total, about 82- 83% conversion is estimated for the UOP hydrocracker, with total low sulfur diesel output of approximately 36,000 bpsd.

Bitumen/diluent splitter – vacuum distillation

The 2006 bitumen study employed a unique low cost atmospheric distillation configuration, thus avoiding conventional heat integration by using heat integration with the power plant with high pressure steam (70 bars). Since the NWU does not generate its own power, however, it is reasonable to assume that the conventional and more expensive heat integration within the crude and vacuum units is used. This assumed deficiency, relative to the 2006 proposal, is further aggravated by the fact that both the crude and vacuum units are designed for a total acid number (TAN) of 3.5, which is extremely high and requires very expensive metallurgy for all heat transfer services.

Gasification – hydrogen production

The pitch gasification section, as licensed by Air Liquide-Lurgi and based on Shell technology, consists of several process and support units.

a. The oxygen plant is a major supporting unit licensed by PraxAir. It will provide "across the fence" 1,220-1,260 tons per day (tpd) oxygen at >98% purity, at high pressure of between 70 and 80 bars. Assuming standard industry practice, this oxygen is likely to be provided on a "take or pay" basis for 15 years, with a 12-15% guaranteed return after tax.

   The average cost of oxygen is about US $90 /ton, which equates to approximately US$ 2.2 per barrel of fuel products.

b. Gasification by Lurgi uses the reaction of pitch with oxygen and steam at 1,400°-1,450°C and 65 bars. The resultant product will be a mixture of hydrogen, CO (carbon monoxide), CO2, H2S, COS and water vapor. It will be cooled with quench water to some 240-250°C, generating saturated steam at about 15-20 bars.

c. There will be a solid stream of unconverted carbon from gasification, possibly 5% of total carbon in the feed, which will include the heavy metals from the bitumen feed, perhaps 2-4%. It will be disposed to landfill. The purge water, containing heavy metals, will be routed to water treatment.

   In the 2006 bitumen study, all unconverted carbon is routed as a partial fuel to power generation along with the purge water. Thus waste water treatment from gasification is integrated with the flue gas treated in the power plant. All heavy metals are disposed of via gypsum sludge into a secured landfill.

d. The cooled gas from gasification, regardless of the method of heat recovery, will undergo a shift reaction (presumably a sour shift), where some 94-95% of CO from

gasification will react with water vapor to produce more hydrogen and CO2, together with conversion of COS to H2S.

e. The products from the above reaction, which on a dry basis comprise some 55-60% hydrogen, 35-40% CO2, 0.5-0.8% H2S and some 2.0% residual CO will go to the Rectisol cold methanol absorption, which will produce three major streams:

   i. 97 mol % hydrogen / 2.0% CO / 1% methane nitrogen and argon; this product will proceed to methanation;

   ii. Nearly pure CO2, containing traces (0.5 volume %) of hydrogen; and

   iii. A H2S-rich stream consists of some 25% H2S. The balance will be CO2, which amounts to 30% of the assumed 10% "un-captured carbon".

f. The Rectisol unit will consume a substantial amount of power (approximately 5,000-6,000 kW), mostly for refrigeration at about -40°C.

g. Hydrogen with some 2.0% CO and 1.0% methane, nitrogen and argon and ppm level of CO2, needs to be separated from the residual CO prior to being compressed from 60-65 bars to the 180-200 bars needed for vacuum residue hydrocracking and UOP Unicracking

h. The raw hydrogen (containing 2% CO) will proceed to the catalytic methanation process where CO with hydrogen will form methane. Ultimately the methane, nitrogen and argon are purged from hydrocracking along with some hydrogen and routed to the fuel gas system

The compression of about 3,500 tons per day of CO_2 for enhanced oil recovery (EOR) will consume some 13,000-15,000 kW. We understand that CO_2 compression and the associated carbon dioxide pipeline are not part of the North West Upgrader project. Thus the associated costs may eventually be reflected in the sale price of the CO_2.

In the 2006 study no capacity for CO_2 compression was required. Should a market develop and provide economic justification for CO_2 recovery and / or sequestration, the 2006 configuration would have sufficient generation capacity for such a "non-critical interruptible user." Therefore, since investment for surplus power generation capacity was already part of the 2006 proposal, the cost of any incremental power for CO_2 compression would be lower by 50%-70%, compared to the NWU project.

Sulfur recovery

The sulfur recovery uses sub dew point technology by Comprimo of The Netherlands, executed by Jacobs Engineering for NWU. The majority of the sulfur to be recovered, approximately 90%, will be generated as concentrated H_2S, together with sour gas from sour water stripping. This latter will be contaminated with ammonia from the hydro-

processing units. The balance of the sulfur will be H_2S, diluted with about 75% CO_2 from the Rectisol unit.

a. A conventional Claus unit, more likely oxygen enriched will achieve about 95-96% sulfur recovery, or approximately 350-400 tpd.

b. A further 3.5-4.5% sulfur can be recovered (about 15-20 tpd) can be attributed to the sub dew point tail gas unit.

c. The balance of 0.5% of the sulfur (H2S, SO2 and sulfur vapors) are released to the atmosphere as SO2, following incineration with fuel gas.

Steps (b) and (c) may constitute 50% of the total investment in sulfur recovery.

In the 2006 study, however, sulfur recovery was integrated into ammonium sulfate production, following ammonia recovery from sour water. No ammonia recovery is included in the design of NWU.

Power consumption

Unlike the 2006 configuration, in which electric power is generated within the facility, we understand that in NWU electric power will be purchased from the local grid for about US$ 0.055/kW.

Power consumption has been estimated to range from 23,000 to 26,000 kW within battery limits, plus an estimated 13,000-15,000 kW for CO_2 compression by a 3rd party. The oxygen plant by PraxAir will probably consume 23,000 to 25,000 kW but this cost will be reflected in the price of oxygen charged to NWU.

Carbon capture

The assumed key premise of the NWU project is 90% "carbon capture." Subject to more detailed evaluation, this high level of carbon capture could result in **35-40% higher capital investment over the 60% carbon capture** option developed for the 2006 study.

As mentioned, the captured carbon (about 3,500 tpd of CO_2) is transferred to a 3rd party, compressed most likely to 130-150 bars and sent by pipeline to enhanced oil recovery in depleted oil fields in Alberta. We estimate that the revenue generated could be of the order of US$ 15-18/ton, creating a credit of roughly $1.3/barrel of fuel product, or roughly **$0.40/barrel fuel product for** the incremental CO_2 recovery above the 60% potential recovery in the 2006 proposal.

The 35-40% higher capital cost from the 90% carbon capture target will result in **less than 1% additional revenue for NWU.**

Steam generation

We understand that the steam at North West Upgrading will be generated within the battery limits. Waste heat recovery in the gasification section will probably be at 15-20 bars saturated, shift 30-40 bars saturated and 30-40 bars saturated steam will also be produced in the sulfur plant. The balance of the steam requirement, together with high level heat (mostly for the crude and vacuum units, together with hydrocracking) will be produced by firing fuel gas from light ends recovery as well as purge gas from hydrocracking.

Cooling water

The 2006 proposal maximizes the usage of cooling water, in turn reducing capital investment. Air cooling is frequently deployed in Alberta, however, including at North West Upgrading.

Project Execution

The following companies, contractors and licensors are reported to have been involved in executing this project for at least 13 years.

Number	Company	Role	Location
1	Fluor Engineering	Early conceptual stages	Southern California
2	Fluor Engineering	Front end engineering and design (FEED)	Calgary
3	SNC Lavalin	Detailed engineering	Engineering office in Calgary
4	ABB Lummus / Chevron joint venture	Residue hydrocracking	Bloomfield, New Jersey
5	UOP licensing	Unicracker licensing	Des Plaines, Illinois
6	Jacobs Engineering / Comprimo	Sulfur recovery, including tail gas	Calgary
7	KBR	Construction of residue hydrocracking	
8	Worley Parsons	Piping work	Canada
9	Air Liquide, Lurgi, Shell	Gasification	Frankfurt, Germany
10	Lurgi, Air Liquide	Shift, Rectisol and methanation	Frankfurt, Germany
11	Foster Wheeler	Steam generation	
12	PraxAir	Oxygen plant, across the fence	

Experience from other projects strongly suggests that long duration execution with so many parties involved, combined with design and engineering changes, will inevitably result in low efficiency and escalation of capital costs. It is not unreasonable to expect that in such cases, regardless of the underlying design philosophy or configuration at conception, the net effect could easily double the capital investment from initial estimates.

This is more likely what happened at NWU.

Summary

The design philosophy of the North West Upgrader was driven largely by environmental considerations (especially carbon capture), which combined with poor and overly complex project execution appear to have caused dramatic escalation of capital costs. In turn, this has triggered claims that bitumen refining in Alberta is not economically viable.

The alternative for bitumen producers in Alberta is to ship diluted bitumen to the US. Given the current environment of very low prices, netbacks to Alberta are **very poor**. The alternative, of course, would be to upgrade at least a portion of Alberta's production and export high value products to other markets.

US refiners are not capturing carbon and not likely to do so in the future. Instead, most deep conversion refineries in the US Gulf Coast use delayed coking. By imposing carbon capture in Alberta, the Provincial Government is increasing the capital cost and shrinking the available economic returns from upgrading.

Furthermore, proposed pipeline projects such as Trans Canada's recently suspended Keystone XL will rely on condensate diluent from shale gas production in the Williston basin of North Dakota. Producing the condensate will generate very large amounts of methane that will be flared in North Dakota because there no market outlet. The quantity of CO_2 released is estimated to be much higher than that derived from bitumen processing in Alberta where CO_2 capture is not imposed on the process design. If the assumed methane were emitted without flaring, the presumed impact on climate change is likely to be much worse.

Appendix 2: Economic Modelling Assumptions

General Assumptions

The cash flow model has been developed on a real term (2015) basis, using an 8.1% real discount rate with NPVs discounted to the end of 2015. The indicative valuations presented in this section represent the enterprise value of the whole project from 2015.

Table 11: Base Case Assumptions

Area	Base Case Assumption
Pricing (sales and feedstock)	Based on CEG Europe price set, derived from WTI crude at the following three constant real price levels: • $40 / barrel • $50 / barrel • $60 / barrel The bitumen/diluent feedstock is assumed to be similar to Western Canada Select which has been used as the feedstock price – this has been correlated to WTI. The return stream of diluent has been priced at WTI plus 5%. We have not assumed a petrochemical price cycle.
Construction Phase	Based on the Expenditure Curve set out in the 2006 Study, which is as follows: • Year 1 – 2016 2% • Year 2 – 2017 13% • Year 3 – 2018 35% • Year 4 – 2019 30% • Year 5 – 2020 13% • Year 6– 2021 7%
Ramp up	The ramp-up over four years set out below and is based on our experience with other plants of this nature. Starting in 2018, we assume a ramp-up as follows: • 2020 at 10% • 2021 at 50% • 2022 at 90% • 100% by 2023
Operating Rates	The 2006 Study states that the plant configuration is based on 350 stream days of the calendar year. Based on our experience, however, a plant will never actually operate for the full number of stream days over the long term given major turnarounds and minor repair schedules. We believe that 330 days of operation for the plant is a more reasonable expectation. Should the plant be able to run at a more efficient level once fully operational (such as the 350 days set out in the 2006 Study), then it is likely to have a positive impact on cash flows and the overall economics of the Project.
Capital costs	Capital costs assumed to be $ 9.6 billion, based on CEG's adjustments to the 2006 Study (see section 4.2.5 above). In addition, we have included additional 'stay in business capex.' It is based on 0.50% per year of ISBL and OSBL capital costs, starting in year 3 of operation.
Variable costs	This was a very high level estimate and mainly represents processing costs (i.e. chemicals and catalysts) based on our estimates. Variable costs will need to be assessed in more detail at a later stage.
Fixed Costs	Represents labour costs, insurance and taxes and maintenance. Figures for the first two items were set out in the 2006 Study. We have used the insurance and taxes figure from the 2006 Study and escalated it at 3% p.a. to arrive at a 2015 rebased cost. For labour, we rebased the 2006 figure using labour cost inflation rates in Canada from 2007 to

	2015 of c.4% p.a. As a result, labour costs increased from US$ 200 million p.a. in 2006 to US$ 289 million p.a. in 2015. Based on average salary costs of c. $100,000 p.a., however, this would imply a labour force of around 2,500, which we believe to be very high. Using benchmark staffing information derived from North America, a more reasonable estimate of the workforce for this plant would be in the region of 1,000 employees, which would also include maintenance staff. Using the average salary costs of c. $112,000, the labour cost would be approximately US$ 112 million p.a. We have also included maintenance costs of 1% p.a. of the replacement cost of the plant. No further fixed costs have been included and clearly these would need to be properly assessed in more detail at a later stage.
Project Tax rates	Assumed a combined federal / provincial corporate income tax rate of 25%.
Depreciation	Straight line for 20 years.
Working capital	The 2006 Study sets out certain basis on which working capital items are derived, however, there does not appear to be full transparency around how the working capital amounts are calculated. We have attempted to replicate the relative working capital levels from the 2006 Study and have assumed the following: • Feedstock inventory: 5 days production • Product stock: 5 days production • Debtor days: 10 days sales • Creditor days 0 days purchases
Cash flow basis / Inflation	The cash flow model has been developed on a real basis. Given the ongoing tight labour market in the industry in North America, we have assumed real wage inflation of 1% per annum.
Discount Rate / Cost of Equity	We have used a real cost of capital (assuming 100% equity at this stage) for this project of 8.1%.
Cash flow timeline and Terminal Value (TV)	The model has estimated cash flows for the Project from 2016 to 2045. In 2046, a terminal value has been estimated based on the Project's EBITDA in 2045. An average enterprise value / EBITDA multiple of 5.7 has been used. This is based on the current average Enterprise Value / EBITDA of quoted North American companies which focus mainly on refining or downstream operations. The benchmark companies used are Tesoro, Valero, Phillips 66 and Marathon Petroleum.
Sales	The Base Case assumes all products are sold into the local market, given the inland location of the complex. We have also run some sensitivities on assumed sales into alternative markets.

Source: CEG